Group R 24
OKP 94 4490

AEROCRYOTHERAPEUTIC COMPLEX
KAEKT-01 "KRYON"

USER'S GUIDE

941623.001 RE

AEROCRYOTHERAPEUTIC COMPLEX
«KAEKT-01 "KRYON"» (cryosauna)

Cryo-sauna - new equipment for the healing action on entire organism.
Cryo-sauna - corrects physiological processes, is restored natural balance, it stimulates exchange of substances and immune system. Procedures in the *cryo-sauna* - are fleeting (2-3 min.), is caused rapid positive reaction. The result of cryo-therapy is observed after 5-10 min. and continues not less than 6 hour.

Cryo-sauna < KAEKT-01 "KRYON"> (reg.doc. №29/06101299/4972-03)
it is the most reliable and safest device for conducting the cryo-therapy, in it the patient is submerged in the cryogenic gas only on the arms. Installation is intended for conducting the individual procedures according to the localized diagram of the contact of patient with the heat-transfer agent and is cryo-sauna with the adjustable position of patient.

Brief of technical characteristics.

The temperature in the cabin of patient with conducting of procedure is from -130 to -160 °C.
The power, consumed by complex, not more than.....1,0 kW.
Complex works from the network of alternating current with a frequency of 50 Hz with a stress of 230 ± 23 V.
Max. area occupied by complex.....4 m^2.
In the cryo-sauna **«KAEKT-01 "KRYON"»** as the source of cold is used liquid nitrogen (N_2). For storing liquid nitrogen are used the cryogenic capacities (one vessel SK –30; they enter into base assembly).

The major advantages

- the complex **«KAEKT-01 "KRYON"»** is 10 times cheaper than foreign analogs
- simplicity and reliability in the operation
- the low consumption of electric power, installation is connected to the everyday electric brush
- minimum expenditures for preparation for the work, period of the preparation of 5-10 minutes
- minimum area for the arrangement
- minimum requirements for the technical qualification of personnel
- the complex **«KAEKT-01 "KRYON"»** the most bought installation in the world, these apparatuses is released more than all other cryo-therapeutic systems.

With the minimal sizes and the electrical power, the complex **«KAEKT-01 "KRYON"»** possesses the capacity of 15 procedure/hour, and on the therapeutic action 8 times more effective than analogs.
The delivery of complex beyond the limits of Saint Petersburg is achieved according to the diagram of transportation in the standard container by load capacity 3000 kg.
During the delivery of equipment to customer the specialists OF RESEARCH AND PRODUCTION ENTERPRISE "KRYON" carry out the instruction of the service personnel through questions of operation and maintenance of complex.

DPU

F - Set "drying" regime
S/S - start/stop - set time regime
Up/down – movement of lift

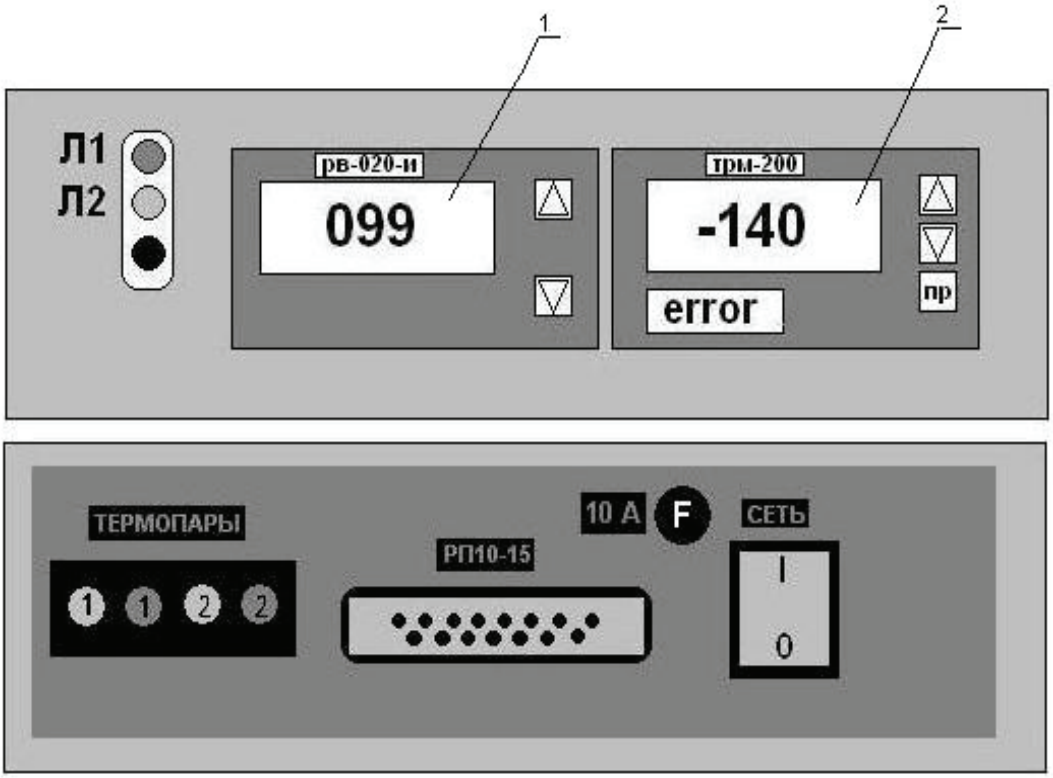

1 - time indicator
2 - the indicator of the temperature
Л1 - the light-emitting diode indicator of pressure
Л2 - the light-emitting diode indicator of the procedure

Starting sequence of the complex «KAEKT-01 "KRYON"»

1. Turn on toggle switch network in the upper position "I".
2. Pushing of knob F to establish regime "drying" for 120 minutes.
3. At the end of drying to transfer cryo-sauna into the regime "work" by pushing of knob S/S (start/stop).
4. By knob of the rotary switch, located inside the pump for pumping of liquid cryoagent, to raise the pipe of the fence of liquid nitrogen upward to its self-catching.
5. Establish cryogenic vessel into the section inside the pump for pumping of liquid cryoagent; by the knob of rotary switch to lower the pipe of the fence of liquid nitrogen into the vessel, checking visually its entry into the neck of vessel.
6. Place patient inside the procedural cabin.
7. Using buttons of time setting to establish the assumed time of procedure.
8. With the aid of the buttons "up" and "down" on DPU to establish the height of mobile floor before the agreement of the arms of patient with the upper edge of cabin.
9. To once harvest button S/S (start/stop) for the starting of procedure.
10. To support verbal contact with the patient during the entire procedure.
11. On the completion of procedure, after the automatic lowering of mobile floor, to let out patient from the procedural cabin.
12. For conducting the subsequent procedure to repeat in sequence 6-12.
13. At the end of procedures it is necessary to extract cryogenic vessel from the section, and the pipe of the fence of liquid nitrogen to return to the lower position.
14. To turn off installation for one hour for "warming".
15. By pushing of knob F to establish regime "drying" for 120 minutes.
16. At the end of regime "drying" to remove stress from the installation by toggle switch "network" (position "0").

CONTENT

The present user's guide 941623.001RE contains the description of device, operating principle, technical characteristics and operating instructions of the complex of the aerocryotherapeutic **«KAEKT-01 "KRYON"»** (further - cryo-sauna). With performing of work with the cryo-sauna the general rules of work with the electrical devices and safety regulations with production and consumption of the products of the separation of air in the part of the rules of work with liquid nitrogen must be carried out. The persons, allowed to the work with the cryo-sauna, must have the appropriate qualification, know the present RE and Management for the application of a complex in the medical practice 941623.001D1.

1. DESCRIPTION OF ARTICLE.

AEROCRYOTHERAPEUTIC COMPLEX.

AEROCRYOTHERAPEUTIC COMPLEX 941623.001 is structurally a monoblock, which consists of the following basic assembly units: the cabin of patient 943125.001 (subsequently - cabin), the device of gas preparing LZHNI.943125.002 (gas generator), pump for pumping of the liquid cryoagent 943229.001.

These devices are assembled on the common metallic base and are connected between themselves by tightening bolts. In this case due to the sealing gaskets proceeds hermetic sealing channels for the passage of gas from the pump for pumping of liquid cryoagent to the cabin and vice versa.

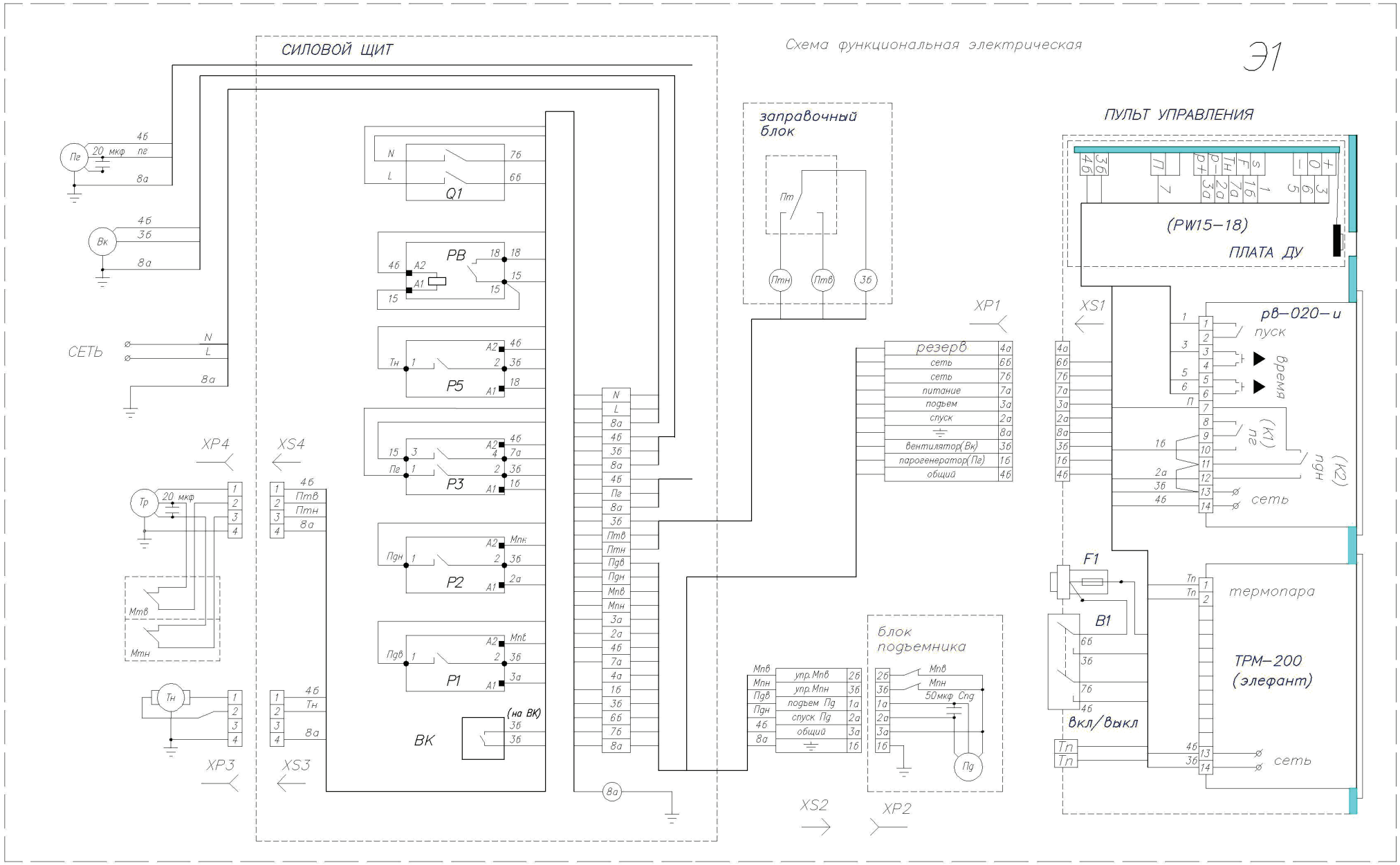
Схема функциональная электрическая
Э1
СИЛОВОЙ ЩИТ
заправочный блок
ПУЛЬТ УПРАВЛЕНИЯ
(PW15-18)
ПЛАТА ДУ
Q1
PB
P5
P3
P2
P1
ВК
(на ВК)
СЕТЬ
XP4
XS4
XP3
XS3
XP1
XS1
XS2
XP2
резерв
сеть
питание
подъем
спуск
вентилятор(Вк)
парогенератор(Пг)
общий
блок подъемника
упр.Мпв
упр.Мпн
подъем Пд
спуск Пд
50мкф Спд
рв-020-и
пуск
время
(K1) пг
(K2) пдн
сеть
F1
B1
вкл/выкл
термопара
ТРМ-200 (элефант)

Electrical scheme of device

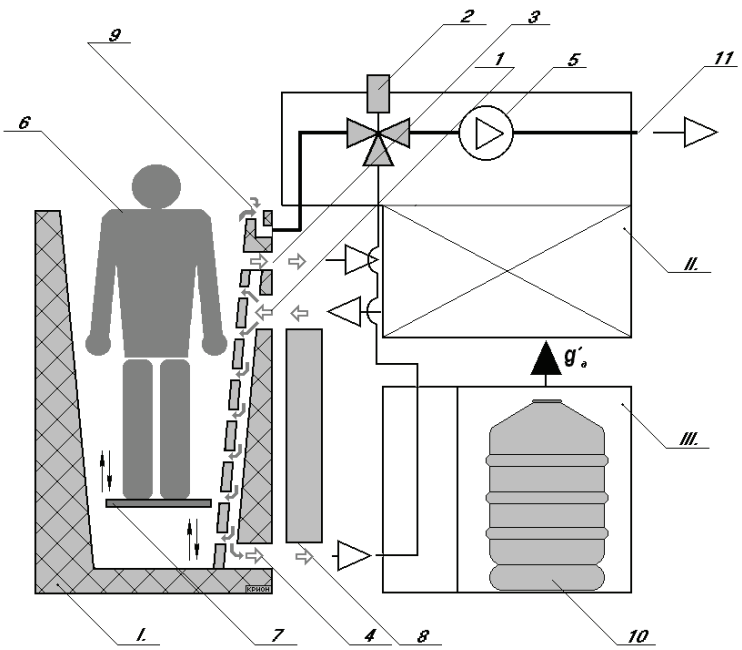

Fig.2 The fundamental flow chart of the aerocryotherapeutic complex «KAEKT-01 "KRYON"» I - cabin of patient; II - device of gas production; III- pump for pumping of liquid cryoagent;

1 - channel of the supply of heat-transfer agent;

2 - three-way valve;

3 - channel of the outlet of the cavity flow;

4 - channel of the finishing evacuation of heat-transfer agent;

5 - channel fan;

6 - patient;

7 - the mobile floor of cabin (hoist)

8 - the drive of mobile floor (hoist);

9 - the channel of the evacuation of waste flow

10 - cryogenic vessel;

11 - the channel of discharge is steam into the atmosphere

1.1.1. Patient cabin

The patient cabin (943125.001) is intended for organizing the direct contact of the patient skin with the low-temperature gas. Structurally cabin is the cylindrical heat-insulated volume with the door for entrance and output of patient, supplied with channels for the flow of gas- heat-transfer agent.

Cabins are carried out with the left and right (specular) arrangement of doors.

External decorative coating of cabin - plastic, and other component parts of the installation - moisture-proof DSP. The internal decorative coating of cabin - cloth, maintains a temperature differential in 150°C.

The upper part of the cabin is reported with the channel of the outlet of the cavity flow and, through three-way valve, with the line of the evacuation of the finished heat-transfer agent.

1.1.2. Gas production device.

1.1.2.1.Arrangement of gas production 943125.002 (gas generator) ensures supply and regeneration of the circulating through the cabin gas- heat-transfer agent, and also its finishing evacuation (emptying of cabin).

1.1.2.2. Into the composition of gas generator enters the short-cycle contact heat exchanger, which ensures supply into the cabin of the patient of conditional heat-transfer agent. The preparation of heat-transfer agent (cooling down to the temperature 120-150 K) is ensured due to the evaporation of cryoagent (liquid nitrogen).

1.1.3. Pump for pumping of liquid cryoagent.

Pump for pumping of the liquid cryoagent 943229.001 is intended for the storage, the accumulation and the batching of liquid nitrogen into the device of gas production. Inside the housing is located it cut off for the cryogenic vessel, that is adaptation for its centering and control of the level of nitrogen.

1.1.4. Cryogenic vessel.

Cryogenic vessel GOST16024 is intended for storage and servicing of complex with liquid nitrogen. One vessel enter into the composition of complex. Liquid nitrogen is the liquid, which boils up at a temperature of -196 °; therefore in the course of time it boils away due to the heat supply from the environment.

The losses of nitrogen during the storage in the vessel are approximately 0,4 kg/day!

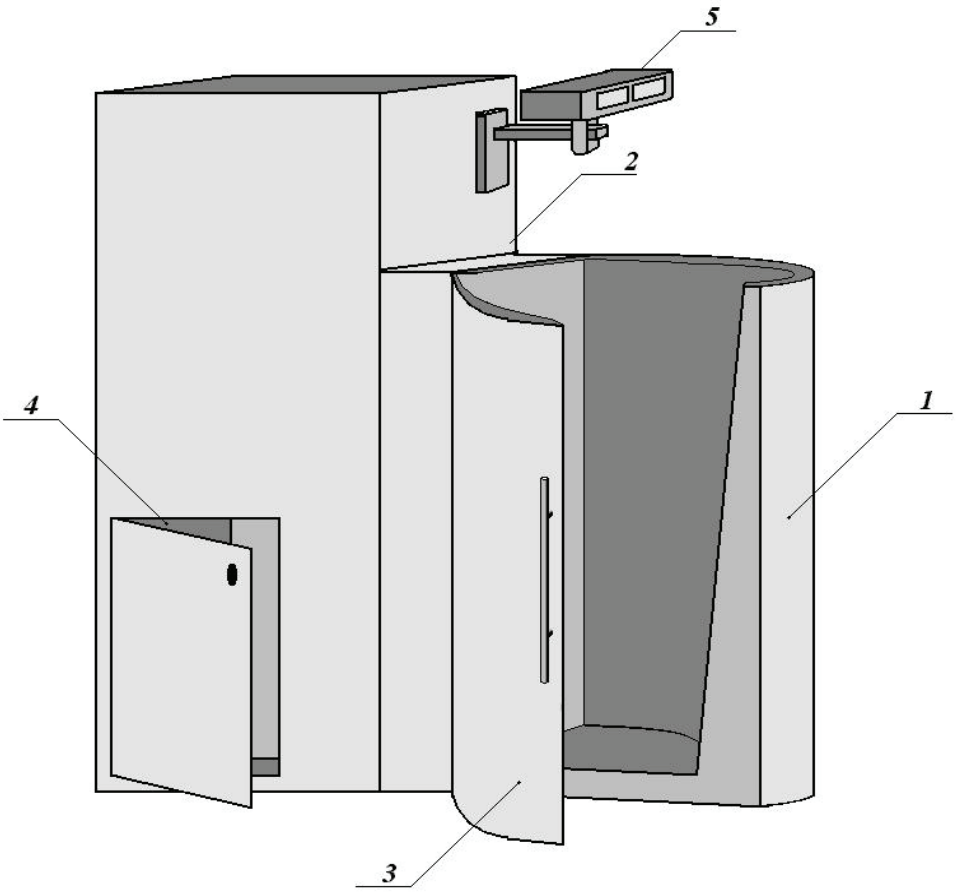

1 – Cabin of patient
2 - The mobile floor of cabin (hoist)
3 – Door of cabin
4 - Pump for pumping of liquid cryoagent
5 – DPU - control panel

Safeguards with the operation of complex.

Gaseous nitrogen is inert, nontoxic and not explosive-flammable gas. However, one should consider that the danger with the rotation with it appears as a result of the dilution by them air in the zone of the presence of the service personnel and reduction in the volume fraction of oxygen in air, which can lead to the oxygen deficiency. Therefore:

1) the head of patient during the procedure must be located HIGHER than the level of steam heat-transfer agent for the purpose of inhalation;

2) without the need one ought not to open cabin door to the end of procedure and automatic emptying of cabin; in the case of repeated discharge of gaseous nitrogen into working the accommodation, one should conduct its ventilation.

With the rotation with the Dewar flasks with liquid nitrogen it follows to avoid the entry of his drops and drops in the open sections of the skin. If necessary for pouring of one vessel in another to use standard funnels for the tints of liquid cryo-products.

1.2. Modes of operation of complex.

In the work of complex two basic regimes are separated: "Work" and "Drying". In the regime "Work" are separated three sequential sub-regimes: PAUSE, SUPPLY, FINISHING, EVACUATION (see. Fig. 2).

Sub-regime "Pause" characterizes state main complex in the pauses between the procedures, i.e., in the periods of the change of patients or short idle time. In this case works only the stimulator of the expenditure of 5 lines of the evacuation of the finished heat-transfer agent. Removal of gas from the volume of cabin I is achieved through channel 4. Recommended duration of sub-regime "Pause" to 3 minutes.

In the sub-regime "Supply" liquid nitrogen from the Dewar flask enters gas generator II, where it evaporates, and gas-heat-bearer along the line 1 to move into cabin I with the patient. The supply of liquid nitrogen into the gas generator occurs by portions, through the specific time interval, which ensures the filling of cabin with heat-transfer agent. The time of operation of gas generator is advanced by timer. The supply of nitrogen ceases after this time. In the sub-regime "finishing evacuation" mobile floor descends into the lower position and the heat-transfer agent moved away from the cabin by fan 5 (Fig.2). Complex is transferred into the regime of readiness for the following procedure.

2. PREPARATION OF ARTICLE FFOR THE USE.

2.1. Installation, adjustment and putting of complex to use are carried out by manufacturing concern or authorized competent organization in the routine.

2.2. For the connection of complex to the network of alternating current with a stress of 230 V by the frequency of 50 Hz to use only a rosette with the grounding contact!

2.3. Discharge is exhaust steam heat-transfer agent from the installation it must be achieved through waste line 11 (Fig.2) to the street. The height of opening for the connection of waste line is recommended not less than 2,0m from floor level, at which is installed the complex. In the case of the connection of line 11 to the general exhaust ventilation of accommodation or to the street post- air ducts the professional consultation is required.

3. OPERATION OF ARTICLE.

3.1. Drying of complex.

3.1.1. Before beginning work should be included with the aid of button **F** the regime "DRYING" to 120min. If time between the procedures exceeds 10 minutes, and dead time does not exceed 30 minutes, then cryo-sauna is necessary to transfer into the regime of temporary conservation, for this it is necessary to li the pipe of the fence of liquid to its self-catching and to hermetically seal the channels of supply. With the launching it is necessary to free channels and to lower pipe, and to also conduct briefly temporary cooling of complex to reaching of operating temperature and only after this to release procedures to patients. If dead time exceeds 30 minutes necessary to make technological interruption to the drying, it is necessary for this (see p. 14-15 of division starting sequence). Also the very must be made at the end of workday. In this case the pipe of the fence of liquid nitrogen must be located in the lower position.

3.2. Cooling complex.

3.2.1. The first procedure in the beginning of workday is conducted without the patient, for the purpose of cooling complex. With the aid of the buttons of time setting (see fig.) to advance 300 s and to neglect procedure by pushing of button S/S.

3.2.2. Gradually, in proportion to reduction in the temperature in the gas generator, cabin is filled up with heat-transfer agent. The criterion of the readiness of complex for conducting of procedures with the patient is reduction in the temperature to - 130... -150°C (on the indicator of temperature), it is possible to forcedly stop procedure by button S/S.

3.3. Method of procedure with the patient.

3.3.1. To place patient in the cabin and to tightly shut door.

3.3.2. Fixed time of the procedure (should be from 2,5 to 3,5 min for W/M).

3.3.3 If it is necessary by buttons "up" & "down" on DPU to lift patient to the leveling off of his arms with the upper level of cabin.

3.3.3. To neglect procedure by button S/S of PDU.

THE OBSERVATION OF THE MOTION AND FILLING IN CABIN AND THE STATE OF PATIENT IS NECESSARY DURING THE PROCEDURE!

3.3.4. At the end of procedure will occur the automatic emptying of cabin from the heat-transfer agent, the elevator will return to the lower position, and patient can leave cabin.

High Technology Medical Devices

Sreznevského 17, 831 03 Bratislava, Slovakia

onkocet@onkocet.eu **www.onkocet.eu**